FLOWSERVE

# WORCESTER CONTROLS F519/529/819/829

## Full Bore Fire Safe Flanged Ball Valves




*Experience In Motion*

The Flowserve Worcester flanged full bore valve range provides customers with specification compliant product with long service free life resulting in low cost of ownership. All valves comply with the requirements of ASME B.16.34 with a one piece 519/529 design up to 1½" and the two piece design extending the range from 2" to 8"

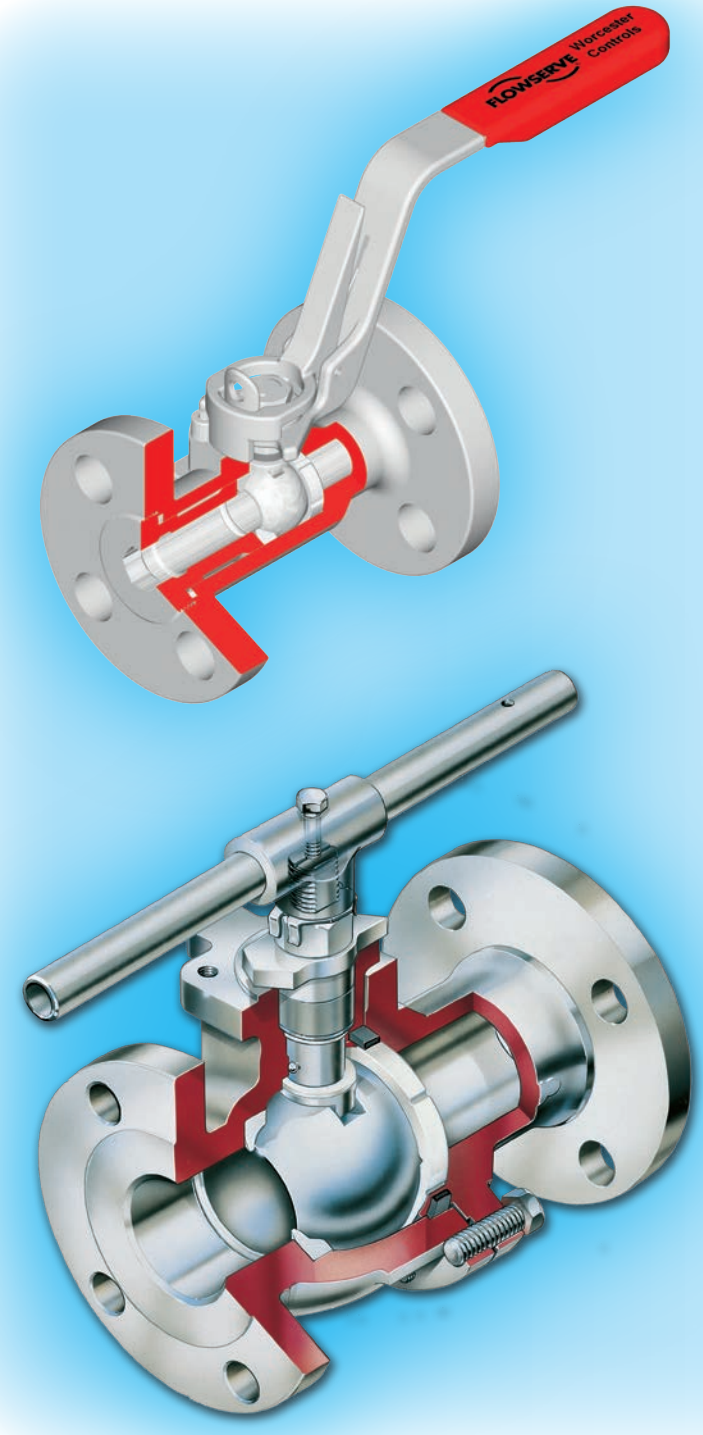


**Anti-blowout stem**
Inserted from inside of valve body for greater safety

**Actuator Mounting**
Conforms to ISO 5211 for ease of actuation

**Anti-static stem design**
Ensures electrical continuity between ball and body

**Ball**
Parallel ported 316 stainless steel as standard with pressure equalizing hole to balance cavity pressure when the valve is open

**Body seals**
PTFE with metal to metal secondary seal on one-piece valves and PTFE coated graphite on two piece eliminating potential media contamination whilst providing fire rated integrity

**Gland packing**
Graphite provides fire rated integrity and combined with the body seals ensures Fugitive Emission compliance to ISO 15848

**Wrench**
Ergonomically designed tamper proof lockable design on one-piece valves and multi position fit wrench on two-piece valves to suit space requirements

**Locking clip**
Maintains position of gland nut during actuation for long leak-free performance

**Actuation**
Valve assembled ready for actuation with no changes to stem build required maintaining valve integrity

**Bolting**
Stainless steel as standard meeting the requirements of ASME VIII Div 1 pressure vessel codes

**Locking Device**
Tamper proof design ensures the padlock cannot be removed or over-ridden when locked either open or closed (North America & Canada only)

# Parts/Materials List

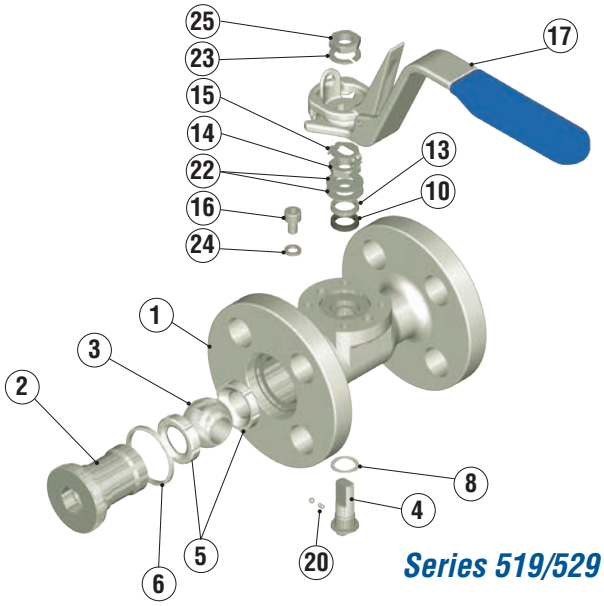


Series 519/529

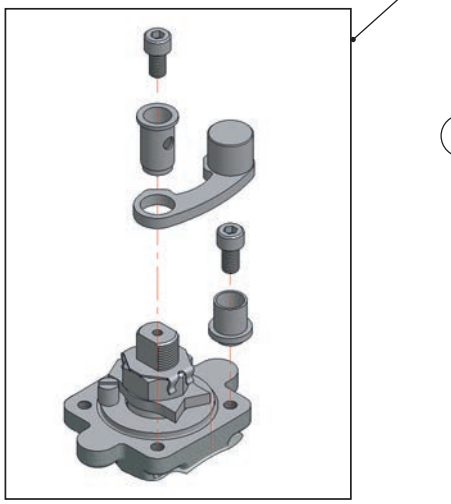


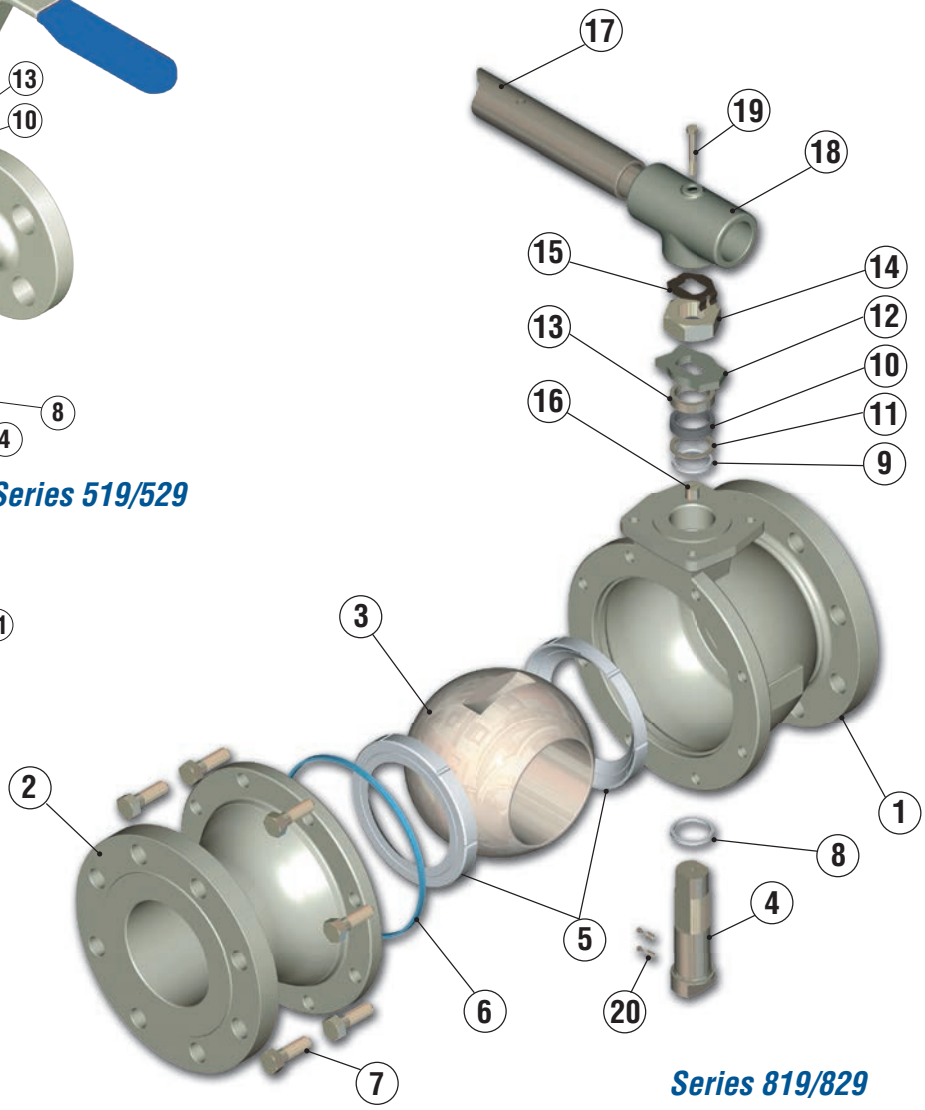


Series 819/829

| Item | Description | Material |
|---|---|---|
| 1 & 2 | Body & Insert/Connector | Stainless Steel ASTM-A351 CF8M<br>Low Temp Carbon Steel ASTM-A352 LCB |
| 3 | Ball | Stainless Steel A479 316, ASTM-A351 CF8M |
| 4 | Stem | Stainless Steel A479 316 |
| 5 | Seat | TFE Virgin, Polyfill (see page 6) |
| 6 | Body Seal | PTFE / PTFE Coated Flexible Graphite |
| 7 | Body Connector Screw | Stainless Steel ASTM A193M, B8 CL2/B8M CL2 |
| 8 | Stem Thrust Seal | TFE, Polyfill |
| 9 | Secondary Stem Seal | TFE |
| 10 | Gland Packing | TFE, Flexible Graphite |
| 11 | Stem location ring | Stainless steel 316 |
| 12 | Indicator Stop | Stainless Steel |
| 13 | Gland | Stainless steel 316 |

| Item | Description | Material |
|---|---|---|
| 14 | Gland nut | Zinc Plated Stainless Steel. Carbon Steel |
| 15 | Gland Nut Locking Clip | Stainless Steel |
| 16 | Stop Pin | Stainless Steel |
| 17 | Wrench | Stainless Steel, Carbon Steel |
| 18 | Wrench Head | Stainless Steel, Carbon Steel |
| 19 | Wrench attachment Bolt | Stainless Steel, Carbon Steel |
| 20 | Anti-static Spring & Plunger | Stainless Steel |
| 21 | Locking /device | Stainless Steel |
| 22 | Washer | Stainless Steel |
| 23 | Lockwasher | Stainless Steel |
| 24 | Washer | Stainless Steel |
| 25 | Nut | Stainless Steel |

# Valve Dimensions 519/529 inch/mm

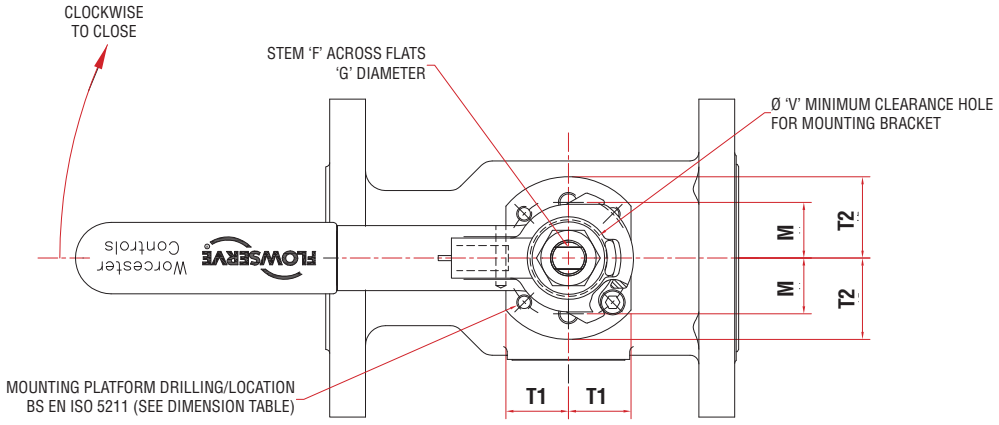


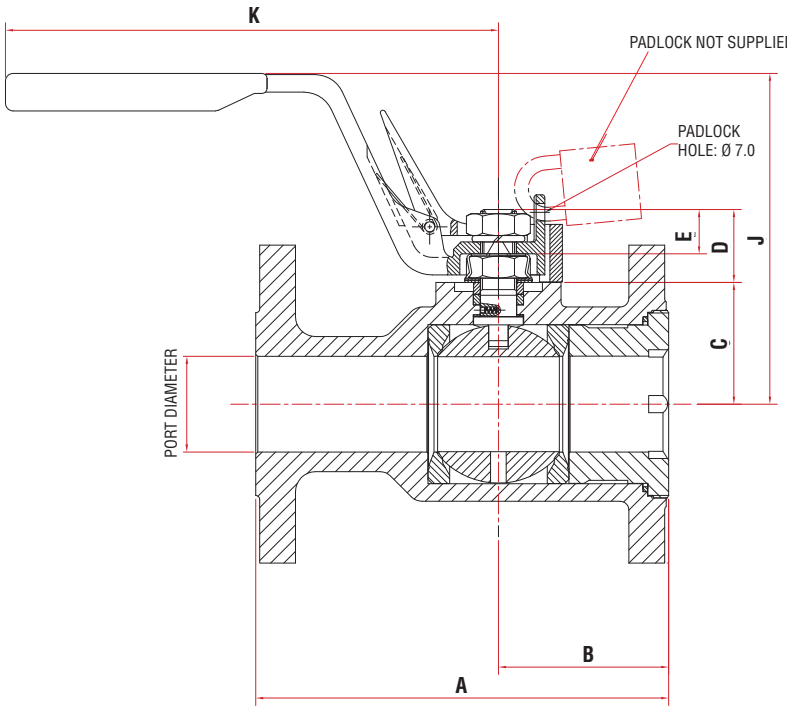


| Valve Size | Port Dia. Min. | A | | B | C | D | E | Stem | | J | K | M | T1 | T2 | V | Mountig Platform | | | |
|---|---|---|---|---|---|---|---|---|---|---|---|---|---|---|---|---|---|---|---|
| | | F519 | F529 | | | | | F A/F | G Thread | | | | | | | ISO Size | PCD | Thread | Depth Min |
| ½" | *0.54* | *4.25* | *5.5* | *2.07* | *0.916*<br>*0.906* | *0.691*<br>*0.664* | *0.421*<br>*0.401* | *0.218*<br>*0.215* | *3/8"-24 UNF* | *3.74* | *6.10* | *0.63* | *0.75* | *0.91* | *0.77* | *F03* | *1.42* | *M5* | *0.31* |
| DN15 | 13.7 | 108.0 | 140.0 | 52.5 | 23.27<br>23.01 | 17.56<br>16.86 | 10.69<br>10.19 | 5.54<br>5.46 | 3/8"-24 UNF | 95.0 | 155.0 | 15.9 | 19.0 | 23.0 | 19.5 | F03 | 36.0 | M5 | 8.0 |
| ¾" | *0.79* | *4.61* | *6.0* | *2.24* | *1.273*<br>*1.263* | *0.935*<br>*0.902* | *0.598*<br>*0.578* | *0.297*<br>*0.294* | *7/16"-20 UNF* | *4.17* | *6.61* | *0.81* | *0.87* | *1.06* | *0.89* | *F04* | *1.65* | *M5* | *0.31* |
| DN20 | 20.0 | 117.0 | 152.0 | 57.0 | 32.34<br>32.08 | 23.76<br>22.92 | 15.19<br>14.69 | 7.54<br>7.47 | 7/16"-20 UNF | 105.8 | 168.0 | 20.7 | 22.0 | 27.0 | 22.5 | F04 | 42.0 | M5 | 8.0 |
| 1" | *1.00* | *5.00* | *6.5* | *2.48* | *1.461*<br>*1.451* | *0.935*<br>*0.902* | *0.598*<br>*0.578* | *0.297*<br>*0.294* | *7/16"-20 UNF* | *4.35* | *6.61* | *0.81* | *0.87* | *1.06* | *0.89* | *F04* | *1.65* | *M5* | *0.31* |
| DN25 | 25.3 | 127.0 | 165.0 | 63.0 | 37.11<br>36.85 | 23.74<br>22.90 | 15.19<br>14.69 | 7.54<br>7.47 | 7/16"-20 UNF | 110.5 | 168.0 | 20.7 | 22.0 | 27.0 | 22.5 | F04 | 42.0 | M5 | 8.0 |
| 1½" | *1.48* | *6.50* | *7.5* | *2.68* | *1.920*<br>*1.909* | *1.163*<br>*1.130* | *0.724*<br>*0.704* | *0.343*<br>*0.340* | *9/16"- 18 UNF* | *5.19* | *7.76* | *0.88* | *0.98* | *1.28* | *1.16* | *F05* | *1.97* | *M6* | *0.39* |
| DN40 | 37.7 | 165.0 | 190.0 | 68.0 | 48.76<br>48.50 | 29.55<br>29.71 | "18.39<br>17.89" | 8.71<br>8.64 | 9/16"- 18 UNF | 131.7 | 197.0 | 22.3 | 25.0 | 32.5 | 29.5 | F05 | 50.0 | M6 | 10.0 |

# Valve Dimensions 819/829 inch/mm

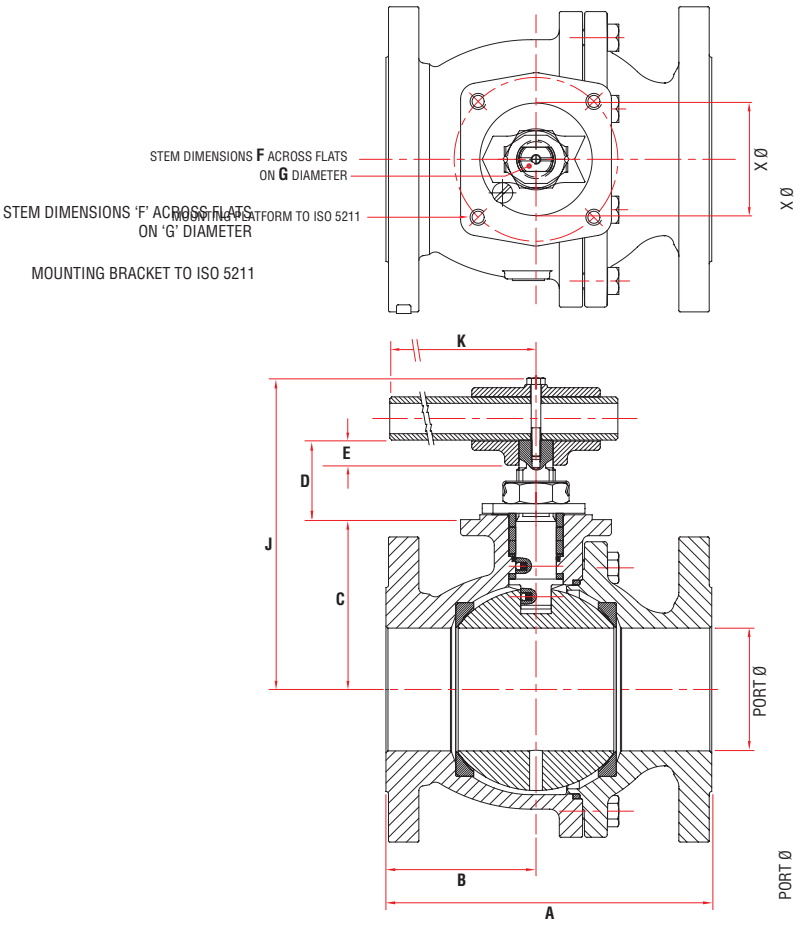


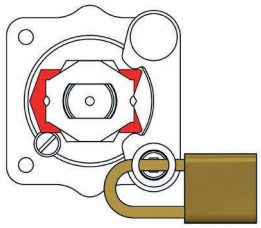

**Locked Open***

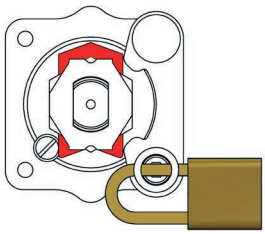

**Locked Closed***

* Padlock not supplied with valve.

| Valve Size | Port Dia. Min. | 819 (ASME Class 150) A | B | C | D | E | F A/F Max. | G Dia. Max. | J | K | X Dia. | ISO Size | 829 (ASME Class 300) A | B | C | D | E | F A/F Max. | G Dia. Max. | J | K | X Dia. | ISO Size |
|---|---|---|---|---|---|---|---|---|---|---|---|---|---|---|---|---|---|---|---|---|---|---|---|
| *2"* | *2.0* | *7.0* | *2.91* | *3.45 3.42* | *1.72 1.63* | *0.52* | *0.55* | *0.79* | *6.14* | *8.86* | *2.17* | *F07* | *8.5* | *2.9* | *3.45 3.42* | *1.72 1.63* | *0.52* | *0.55* | *0.79* | *6.14* | *8.86* | *2.17* | *F07* |
| DN50 | 51.1 | 178.0 | 74.0 | 87.6 86.9 | 43.8 41.5 | 13.1 | 14.0 | 20.0 | 156.0 | 225.0 | 55.0 | F07 | 216.0 | 74.0 | 87.6 86.9 | 43.8 41.5 | 13.1 | 14.0 | 20.0 | 156.0 | 225.0 | 55.0 | F07 |
| *3"* | *3.0* | *8.0* | *3.70* | *4.43 4.39* | *2.01 1.91* | *0.66* | *0.59* | *0.83* | *7.91* | *13.78* | *2.17* | *F07 F10* | *11.0* | *3.7* | *4.72 4.69* | *2.19 2.09* | *0.83* | *0.76* | *1.07* | *8.43* | *21.93* | *2.76* | *F10* |
| DN80 | 76.5 | 203.0 | 94.0 | 112.4 111.6 | 51.1 48.4 | 16.8 | 15.1 | 21.2 | 201.0 | 350.0 | 55.0 | *F07 F10* | 283.0 | 93.5 | 119.9 119.1 | 55.7 53.0 | 21.0 | 19.3 | 27.2 | 214.0 | 557.0 | 70.0 | F10 |
| *4"* | *4.0* | *9.0* | *4.61* | *5.54 5.50* | *2.20 2.09* | *0.86* | *0.76* | *1.07* | *9.25* | *21.93* | *2.76* | *F10* | *12.0* | *5.2* | *5.79 5.76* | *2.87 2.78* | *1.11* | *1.05* | *1.31* | *10.83* | *33.46* | *3.35* | *F12* |
| DN100 | 102.3 | 229.0 | 117.0 | 140.6 139.8 | 55.9 53.2 | 21.8 | 19.3 | 27.2 | 235.0 | 557.0 | 70.0 | F10 | 305.0 | 132.0 | 147.1 146.3 | 73.0 70.3 | 28.2 | 26.6 | 33.2 | 275.0 | 850.0 | 85.0 | F12 |
| *6"* | *6.0* | *15.5* | *7.05* | *7.18 7.15* | *2.87 2.77* | *1.11* | *1.05* | *1.30* | *12.20* | *33.46* | *3.35* | *F12* | *16.0* | *7.0* | *7.66 7.63* | *3.05 2.94* | *1.15* | *1.20* | *1.49* | *12.87* | *33.46* | *3.94* | *F14* |
| DN150 | 152.0 | 394.0 | 179.0 | 182.4 181.6 | 73.0 70.3 | 28.2 | 26.6 | 33.1 | 310.0 | 850.0 | 85.0 | F12 | 403.0 | 179.0 | 194.6 193.8 | 77.4 74.7 | 29.2 | 30.4 | 37.9 | 327.0 | 850.0 | 100.0 | F14 |
| *8"* | *8.0* | *18.0* | *8.11* | *9.35 9.31* | *3.04 2.94* | *1.15* | *1.20* | *1.49* | - | - | *3.94* | *F14* | *20.0* | *9.1* | *10.09 10.05* | *3.48 3.37* | *1.38* | *1.36* | *1.68* | - | - | *5.12* | *F16* |
| DN200 | 203.3 | 457.0 | 206.0 | 237.4 236.6 | 77.4 74.7 | 29.2 | 30.4 | 37.9 | - | - | 100.0 | F14 | 502.0 | 231.0 | 256.2 255.3 | 88.4 85.5 | 35.0 | 34.5 | 42.6 | - | - | 130.0 | F16 |

# Pressure/Temperature Ratings

## TFE SEATS (T)

Virgin PTFE is the most common sealing material and is suitable for almost all media as it has excellent chemical resistance.

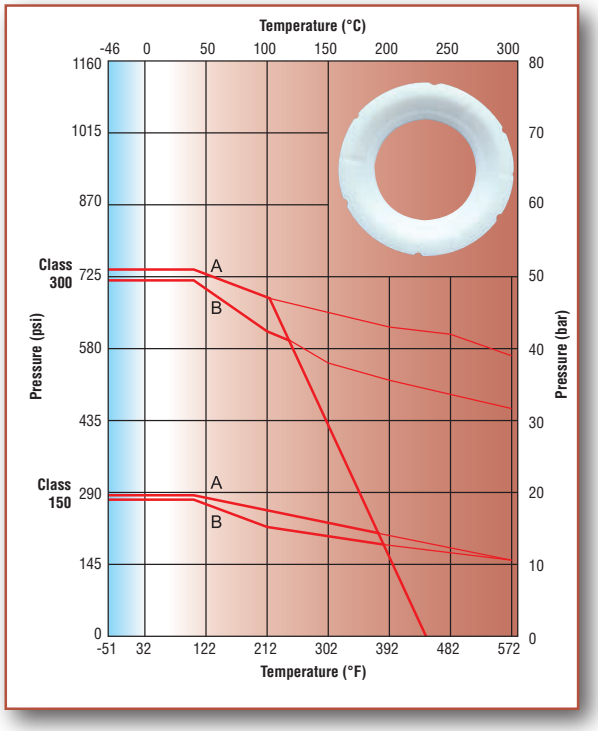


## POLYFILL / FLUOROFILL (P)

Carbon and graphite filled PTFE material an excellent seat material for higher pressure and temperature applications.

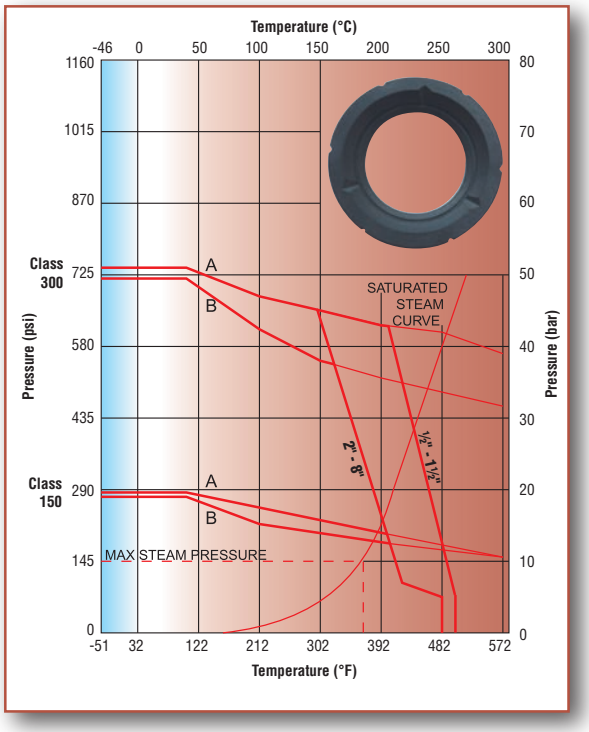


**KEY:** **A** = Carbon steel body rating **B** = Stainless steel body rating

# Pressure Torque Curves

## 519/529 TFE & POLYFILL SEATS

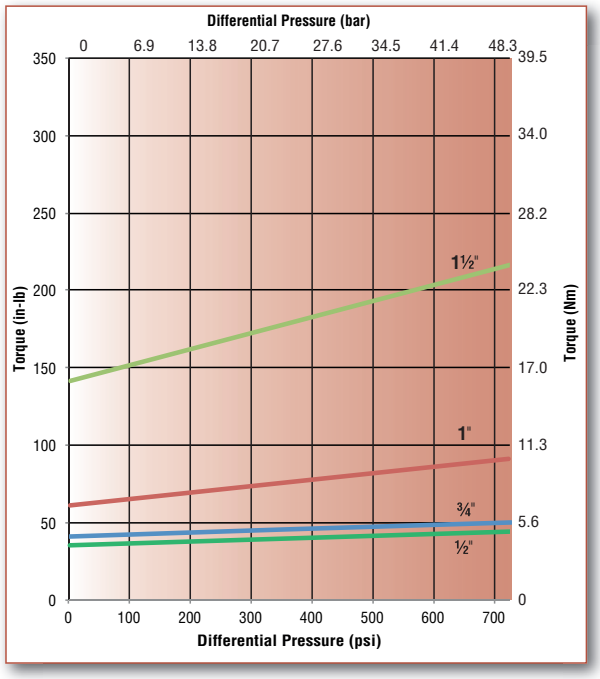


## 819/829 TFE & POLYFILL SEATS

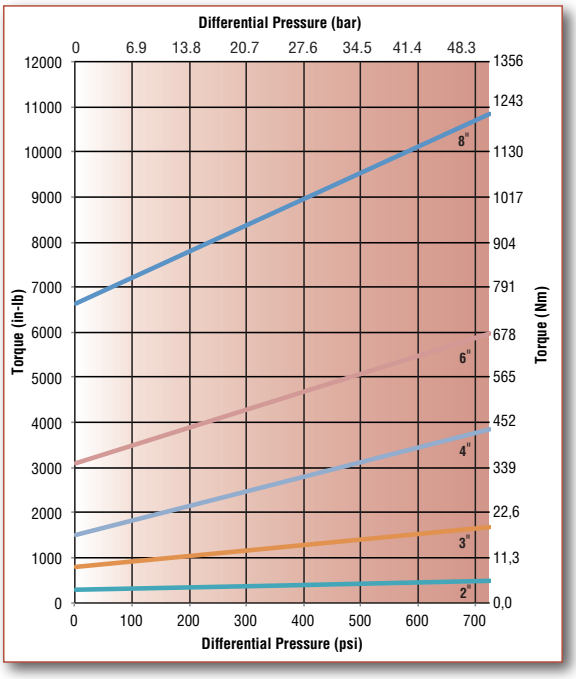


**Note:** Please apply safety factors as recommended in the Worcester Controls Actuator Sizing Manual

# Standards of Compliance

| | |
|---|---|
| Valve Specification | ASME B.16.34 / ISO 17292 |
| Face to Face Lengths | **519/819 (Class 150)**<br>ASME B16.10 Column 19 Short ½" - 4"<br>ASME B16.10 Column 18 Long 6" - 8"<br>EN558 Table 2 Series 3½" - 4"<br>EN558 Table 2 Series 12 6" - 8"<br>**529/829 (Class 300)**<br>ASME B16.10 Column 8 Short ½" - 6"<br>ASME B16.10 Column 7 Long 8"<br>EN558 Table 2 Series 4 ½" - 6" |
| Quality Assurance | ISO 9001 |

| | |
|---|---|
| Fire rating | API 607<br>ISO 10497<br>(Graphite build only) |
| Pressure Test | API 598 |
| Fugitive Emission | EN 15848<br>(Graphite build only) |
| Sour Gas Applications | NACE MR.01.75 / ISO 15156<br>(Internal Only) |
| Flanges | ASME B.16.5 Class 150 & 300<br>BS EN 1759-1 Class 150 & 300 |

# Technical Information

| Valve Size | Series | Weight | | Limiting Stem Torque | | Flow Coefficients | |
|---|---|---|---|---|---|---|---|
| | | lbs | Kg | lb-in | Nm | Cv | Kv |
| ½" DN15 | 519 | 4.0 | 1.8 | 69 | 7.8 | 32 | 27 |
| | 529 | 4.9 | 2.2 | 69 | 7.8 | 32 | 27 |
| ¾" DN20 | 519 | 5.3 | 2.4 | 157 | 17.7 | 54 | 46 |
| | 529 | 7.7 | 3.5 | 157 | 17.7 | 54 | 46 |
| 1" DN25 | 519 | 7.1 | 3.2 | 157 | 17.7 | 94 | 80 |
| | 529 | 10.1 | 4.6 | 157 | 17.7 | 94 | 80 |
| 1½" DN40 | 519 | 12.8 | 5.8 | 299 | 33.8 | 254 | 219 |
| | 529 | 19.0 | 8.6 | 299 | 33.8 | 254 | 219 |
| 2" DN25 | 819 | 26.5 | 12.0 | 1042 | 118 | 501 | 423 |
| | 829 | 33.1 | 15.0 | 1042 | 118 | 501 | 423 |
| 3" DN25 | 819 | 48.5 | 22.0 | 1838 | 208 | 1158 | 978 |
| | 829 | 70.5 | 32.0 | 3083 | 348 | 1158 | 978 |
| 4" DN25 | 819 | 88.2 | 40.0 | 3080 | 348 | 2118 | 1789 |
| | 829 | 125.7 | 57.0 | 6774 | 765 | 2118 | 1789 |
| 6" DN25 | 819 | 194.0 | 88.0 | 6774 | 765 | 5074 | 4287 |
| | 829 | 257.9 | 117.0 | 10100 | 1141 | 5074 | 4287 |
| 8" DN25 | 819 | 388.0 | 176.0 | 10100 | 1141 | 9337 | 7889 |
| | 829 | 520.3 | 236.0 | 14503 | 1639 | 9337 | 7889 |

Cv - Flow in US GPM Pressure psi  Kv - Flow in M3/hr Pressure - bar

# How to Order (Typical)

| A | B | C | D | | | | E | | | | | F | G |
|---|---|---|---|---|---|---|---|---|---|---|---|---|---|
| Size | Standard Variant | Series | Body | Insert/Conn | Ball | Stem | Seat | Body Seal | Thrust Seal | Seconday Stem Seal | Gland Packing | Flange | Build Variation |

| A - Size | | B - Std Variant | | C - Series | | D - Main Parts | | E - Seat & Seals | | F - Flange | | G - Build Variation |
|---|---|---|---|---|---|---|---|---|---|---|---|---|
| ½" 15mm | 05 | Fire rated | F | 519 Series | 519 | Low-Temp Carbon Steel | 5 | Virgin TFE | T | Class 150 | 150 | V3 - Vented Ball |
| ¾" 20mm | 07 | | | 529 Series | 529 | Stainless Steel | 6 | Polyfill/Fluorofill | P | Class 300 | 300 | V32 - Oval Handle |
| 1" 25mm | 10 | | | 819 Series | 819 | | | Graphite | Z | | | V38 - Assembled Dry |
| 1½" 40mm | 15 | | | 829 Series | 829 | | | | | | | V46 - Silicone Free |
| 2" 50mm | 20 | | | | | | | | | | | V66 - European C of C |
| 3" 80mm | 30 | | | | | | | | | | | V72 - PED Compliance |
| 4" 100mm | 40 | | | | | | | | | | | V73 - Cavity fillers |
| 6" 150mm | 60 | | | | | | | | | | | V91 - API 608 Compliance |
| 8" 200mm | 80 | | | | | | | | | | | |



Flowserve Corporation
Flow Control Division
1978 Foreman Drive
Cookeville. Tennessee
38501 USA
Telephone: +931 432 4021
Fax: +931 432 5518

Flowserve Flow Control
A Division of Flowserve GB Ltd.
Burrell Road. Haywards Heath
West Sussex RH16 1TL
United Kingdom
Telephone: +44 (0)1444 314400
Telefax: +44 (0)1444 31440
Email: wvukinfo@flowserve.com

Flowserve Corporation
No. 35. Baiyu Road
Suzhou Industrial Park
Suzhou 215021
Jiangsu Province. PRC
Telephone: +86 512 6288 1688
Fax: +86 512 6288 8737
Email: monsu@flowserve.com

Contact:

For more information about Flowserve Corporation. visit www.flowserve.com or call USA 1-800-225-6989.

FCD WCENBR0032-01 AQ 2/17 Printed in USA.

Flowserve Corporation has established industry leadership in the design and manufacture of its products. When properly selected. this Flowserve product is designed to perform its intended function safely during its useful life. However. the purchaser or user of Flowserve products should be aware that Flowserve products might be used in numerous applications under a wide variety of industrial service conditions. Although Flowserve can (and often does) provide general guidelines. it cannot provide specific data and warnings for all possible applications. The purchaser/user must therefore assume the ultimate responsibility for the proper sizing and selection. installation. operation. and maintenance of Flowserve products. The purchaser/user should read and understand the Installation Operation Maintenance (IOM) instructions included with the product. and train its employees and contractors in the safe use of Flowserve products in connection with the specific application.

While the information and specifications contained in this literature are believed to be accurate. they are supplied for informative purposes only and should not be considered certified or as a guarantee of satisfactory results by reliance thereon. Nothing contained herein is to be construed as a warranty or guarantee. express or implied. regarding any matter with respect to this product. Because Flowserve is continually improving and upgrading its product design. the specifications. dimensions and information contained herein are subject to change without notice. Should any question arise concerning these provisions. the purchaser/user should contact Flowserve Corporation at any one of its worldwide operations or offices.

© 2016 Flowserve Corporation. Irving. Texas. USA. Flowserve and Worcester Controls are registered trademarks of Flowserve Corporation.